Head Dimensions Self-Tapping Screws

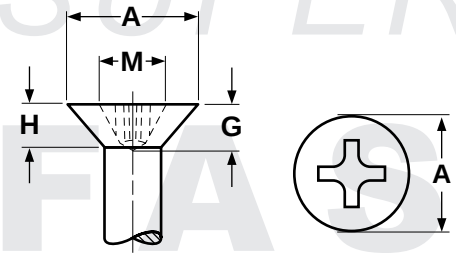

Head & Drive Dimensions for Phillips Flat High-Low

Nominal Size	A Head Diameter		H Head Height	M Recess Diameter		G Recess Penetration Gaging Depth		Driver Size
	Max	Min	Ref	Max	Min	Max	Min	
2	.162	.144	.051	.102	.089	.056	.040	1
4	.212	.191	.067	.128	.115	.082	.066	1
6	.262	.238	.083	.174	.161	.095	.072	2
8	.312	.285	.100	.189	.176	.110	.087	2
10	.362	.333	.116	.204	.191	.125	.102	2
12	.412	.380	.132	.268	.255	.139	.116	3
1/4	.477	.442	.153	.283	.270	.154	.131	3

Undercut Flat head High-Low screws conform to ASME B 18.6.4 specifications (see page 8).

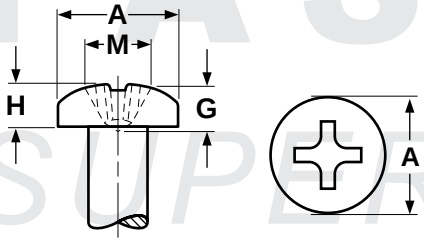

Head & Drive Dimensions for Phillips Pan High-Low

Nominal Size	A Head Diameter		H Head Height		M Recess Diameter		G Recess Penetration Gaging Depth		Driver Size
	Max	Min	Max	Min	Max	Min	Max	Min	
2	.167	.155	.062	.053	.104	.091	.052	.034	1
4	.193	.180	.071	.062	.112	.099	.061	.043	1
5	.219	.205	.080	.070	.122	.109	.071	.053	1
6	.254	.240	.097	.087	.158	.145	.072	.046	2
7 & 8	.270	.256	.097	.087	.166	.153	.080	.055	2
10	.322	.306	.115	.105	.182	.169	.097	.071	2
12	.373	.357	.133	.122	.199	.186	.113	.089	2
1/4	.492	.473	.175	.162	.281	.268	.144	.118	3

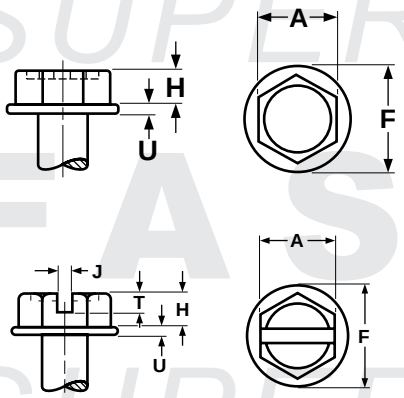

Head & Drive Dimensions for Hex Washer High-Low

Nominal Size	A Width Across Flats		T Slot Depth		J Slot Width		H Height of Head		F Diameter of Washer		U Thickness of Washer	
	Max	Min	Max	Min	Max	Min	Max	Min	Max	Min	Max	Min
4	.125	.120	-	-	-	-	.055	.044	.177	.163	.016	.010
6	.187	.181	.049	.030	.043	.035	.070	.058	.260	.240	.025	.015
8	.250	.244	.053	.033	.048	.039	.093	.080	.328	.302	.025	.015
10	.250	.244	.074	.052	.054	.045	.110	.096	.348	.322	.031	.019
12	.312	.305	.103	.077	.067	.056	.155	.139	.432	.398	.039	.022
1/4	.375	.367	.111	.083	.075	.064	.190	.172	.520	.480	.050	.030
5/16	.375	.367	.111	.083	.075	.064	.190	.172	.520	.480	.050	.030

FASTENERSUPERSTORE.COM