November 2014

SMBJ5V0(C)A - SMBJ170(C)A
600 Watt Transient Voltage Suppressors

Features

- Glass-Passivated Junction
- 600 W Peak Pulse Power Capability on 10/1000 µs Waveform.
- Excellent Clamping Capability
- Low-Incremental Surge Resistance
- Fast Response Time: Typically Less than 1.0 ps from 0 V to BV minimum for Unidirectional and 5.0 ns for Bidirectional
- Typical I_R Less than 1.0 µA Above 10 V
- UL Certificate #E258596

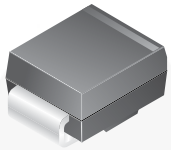

SMB/DO-214AA

Band denotes cathode on unidirectional devices only. No band on bi-directional devices. Bi-directional types have CA suffix where electrical characteristics apply in both directions suitable for bi-directional applications.

Absolute Maximum Ratings

Stresses exceeding the absolute maximum ratings may damage the device. The device may not function or be operable above the recommended operating conditions and stressing the parts to these levels is not recommended. In addition, extended exposure to stresses above the recommended operating conditions may affect device reliability. The absolute maximum ratings are stress ratings only. Values are at T_A = 25°C unless otherwise noted.

Symbol	Parameter	Value	Unit
P_{PPM}	Peak Pulse Power Dissipation on 10/1000 µs Waveform	600	W
I_{PPM}	Peak Pulse Current on 10/1000 µs Waveform	See Table	A
I_{FSM}	Non-Repetitive Peak Forward Surge Current Superimposed on Rated Load (JEDEC Method)(1)	100	A
T_{STG}	Storage Temperature Range	-55 to 150	°C
T_J	Operating Junction Temperature Range	-55 to 150	°C

Note:

1. Measured on 8.3 ms single half-sine wave or equivalent square wave: duty cycle = 4 pulses per minute maximum.

© 2002 Fairchild Semiconductor Corporation

Electrical Characteristics

Values are at T_A = 25°C unless otherwise noted.

Uni-Directional Bi-Directional (C) Device	Part Marking(2)	Reverse Stand-Off Voltage V_{RWM} (V)	Breakdown Voltage V_{BR} (V)		Test Current I_T (mA)	Clamping Voltage at I_{PPM} V_C (V)	Peak Pulse Current I_{PPM} (A)	Reverse Leakage at V_{RWM} I_R (µA)(3)
			Min.	Max.				
SMBJ5V0(C)A	KE	5.0	6.40	7.00	10	9.2	65.2	800
SMBJ6V0(C)A	KG	6.0	6.67	7.37	10	10.3	58.3	800
SMBJ6V5(C)A	KK	6.5	7.22	7.98	10	11.2	53.6	500
SMBJ7V0(C)A	KM	7.0	7.78	8.60	10	12.0	50.0	200
SMBJ7V5(C)A	KP	7.5	8.33	9.21	1	12.9	46.5	100
SMBJ8V0(C)A	KR	8.0	8.89	9.83	1	13.6	44.1	50
SMBJ8V5(C)A	KT	8.5	9.44	10.4	1	14.4	41.7	20
SMBJ9V0(C)A	KV	9.0	10.0	11.1	1	15.4	39.0	10
SMBJ10(C)A	KX	10	11.1	12.8	1	17.0	35.3	5
SMBJ11(C)A	KZ	11	12.2	13.5	1	18.2	33.0	5
SMBJ12(C)A	LE	12	13.3	14.7	1	19.9	30.2	5
SMBJ13(C)A	LG	13	14.4	15.9	1	21.5	27.9	5
SMBJ14(C)A	LK	14	15.6	17.2	1	23.2	25.9	5
SMBJ15(C)A	LM	15	16.7	18.5	1	24.4	24.6	5
SMBJ16(C)A	LP	16	17.8	19.7	1	26.0	23.1	5
SMBJ17(C)A	LR	17	18.9	20.9	1	27.6	21.7	5
SMBJ18(C)A	LT	18	20.0	22.1	1	29.2	20.5	5
SMBJ20(C)A	LV	20	22.2	24.5	1	32.4	18.5	5
SMBJ22(C)A	LX	22	24.4	26.9	1	35.5	16.9	5
SMBJ24(C)A	LZ	24	26.7	29.5	1	38.9	15.4	5
SMBJ26(C)A	ME	26	28.9	31.9	1	42.1	14.3	5
SMBJ28(C)A	MG	28	31.1	34.4	1	45.4	13.2	5
SMBJ30(C)A	MK	30	33.3	36.8	1	48.4	12.4	5
SMBJ33(C)A	MM	33	36.7	40.6	1	53.3	11.3	5
SMBJ36(C)A	MP	36	40.0	44.2	1	58.1	10.3	5
SMBJ40(C)A	MR	40	44.4	49.1	1	64.5	9.3	5
SMBJ43(C)A	MT	43	47.8	52.8	1	69.4	8.6	5
SMBJ45(C)A	MV	45	50.0	55.3	1	72.7	8.3	5
SMBJ48(C)A	MX	48	53.3	58.9	1	77.4	7.8	5
SMBJ51(C)A	MZ	51	56.7	62.7	1	82.4	7.3	5
SMBJ54(C)A	NE	54	60.0	66.3	1	87.1	6.9	5
SMBJ58(C)A	NG	58	64.4	71.2	1	93.6	6.4	5
SMBJ60(C)A	NK	60	66.7	73.7	1	96.8	6.2	5
SMBJ64(C)A	NM	64	71.1	78.6	1	103.0	5.8	5
SMBJ70(C)A	NP	70	77.8	86.0	1	113.0	5.3	5
SMBJ75(C)A	NR	75	83.3	92.1	1	121.0	5.0	5
SMBJ78(C)A	NT	78	86.7	95.8	1	126.0	4.8	5

Notes:

2. Color band denotes cathode on unidirectional devices only. No color band on bidirectional devices.
3. For bidirectional parts with V_{RWM} < 10 V, the I_R max limit is doubled.

© 2002 Fairchild Semiconductor Corporation

Electrical Characteristics (Continued)

Values are at T_A = 25°C unless otherwise noted.

Uni-Directional Bi-Directional (C) Device	Part Marking(2)	Reverse Stand-Off Voltage V_{RWM} (V)	Breakdown Voltage V_{BR} (V)		Test Current I_T (mA)	Clamping Voltage at I_{PPM} V_C (V)	Peak Pulse Current I_{PPM} (A)	Reverse Leakage at V_{RWM} I_R (µA)(3)
			Min.	Max.				
SMBJ85(C)A	NV	85	94.4	104.0	1	137.0	4.4	5
SMBJ90(C)A	NX	90	100.0	111.0	1	146.0	4.1	5
SMBJ100(C)A	NZ	100	111.0	123.0	1	162.0	3.7	5
SMBJ110(C)A	PE	110	122.0	135.0	1	177.0	3.4	5
SMBJ120(C)A	PG	120	133.0	147.0	1	193.0	3.1	5
SMBJ130(C)A	PK	130	144.0	159.0	1	209.0	2.9	5
SMBJ150(C)A	PM	150	167.0	185.0	1	243.0	2.5	5
SMBJ160(C)A	PP	160	178.0	197.0	1	259.0	2.3	5
SMBJ170(C)A	PR	170	189.0	209.0	1	275.0	2.2	5

Notes:

2. Color band denotes cathode on unidirectional devices only. No color band on bidirectional devices.
3. For bidirectional parts with V_{RWM} < 10 V, the I_R max limit is doubled.

Typical Performance Characteristics

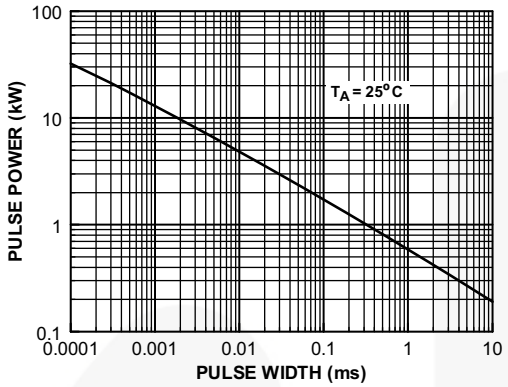

Figure 1. Peak Pulse Power Rating Curve

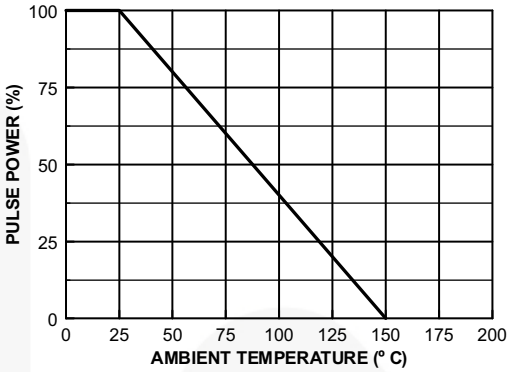

Figure 2. Pulse Derating Curve

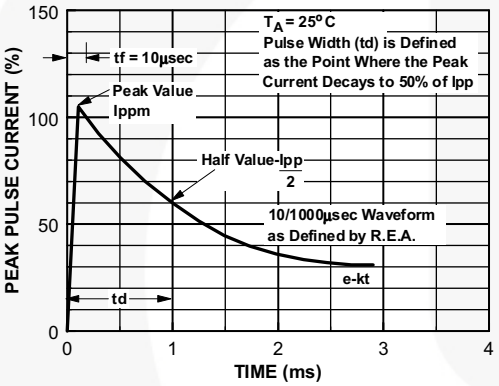

Figure 3. Pulse Waveform

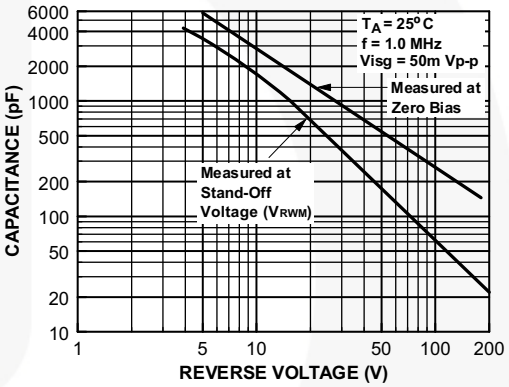

Figure 4. Junction Capacitance

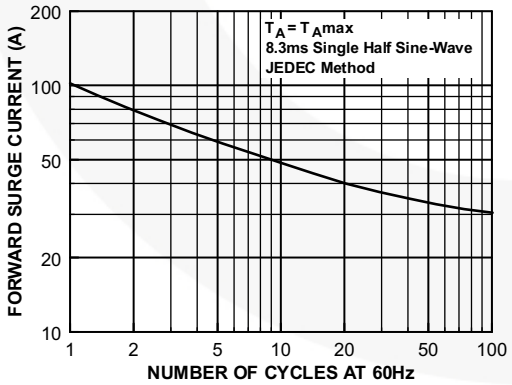

Figure 5. Non-Repetitive Surge Current

THIS DRAWING IS THE PROPERTY OF FAIRCHILD SEMICONDUCTOR CORPORATION. NO USE THEREOF SHALL BE MADE OTHER THAN AS A REFERENCE FOR PROPOSALS AS SUBMITTED TO FAIRCHILD SEMICONDUCTOR CORPORATION FOR JOBS TO BE EXECUTED IN CONFORMITY WITH SUCH PROPOSALS UNLESS THE CONSENT OF SAID FAIRCHILD SEMICONDUCTOR CORPORATION HAS PREVIOUSLY BEEN OBTAINED. NO PART OF THIS DRAWING SHALL BE COPIED OR DUPLICATED OR ITS CONTENTS DISCLOSED. THE INFORMATION CONTAINED ON THIS DRAWING IS CONFIDENTIAL AND PROPRIETARY.

REVISIONS

NBR	DESCRIPTION	DATE	BY/APP'D
1	RELEASED TO DCC	19MAY2008	SDLEE / FSSZ

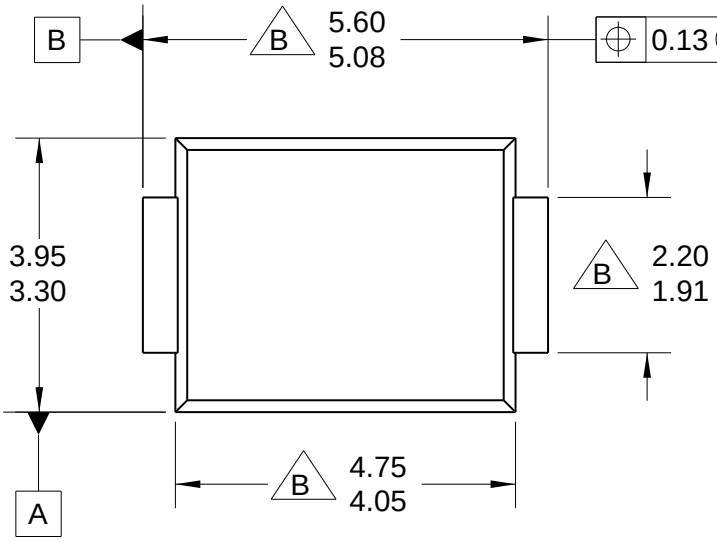

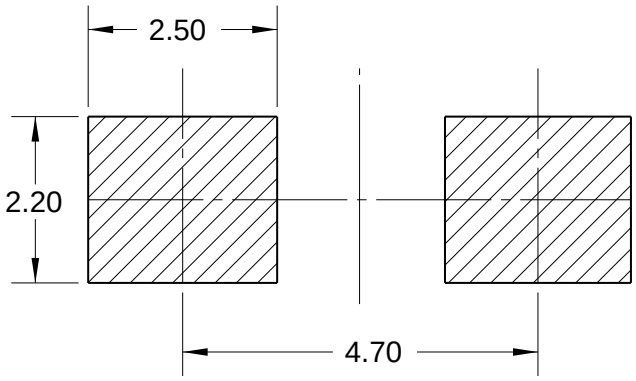

LAND PATTERN RECOMMENDATION

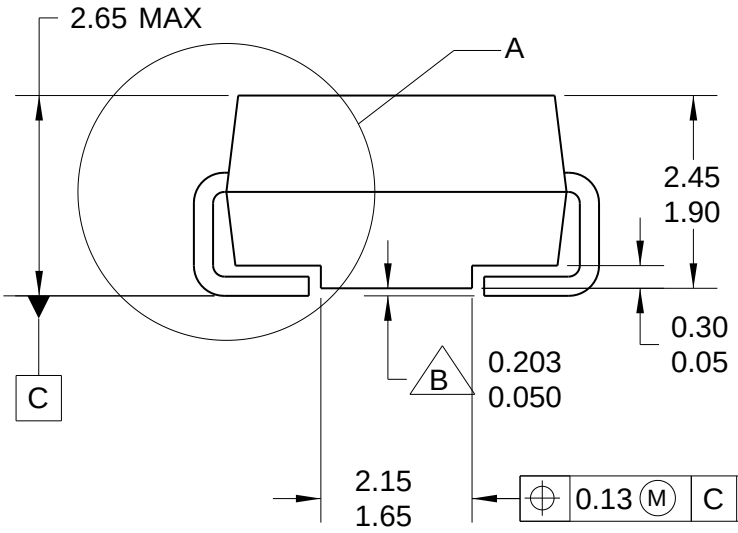

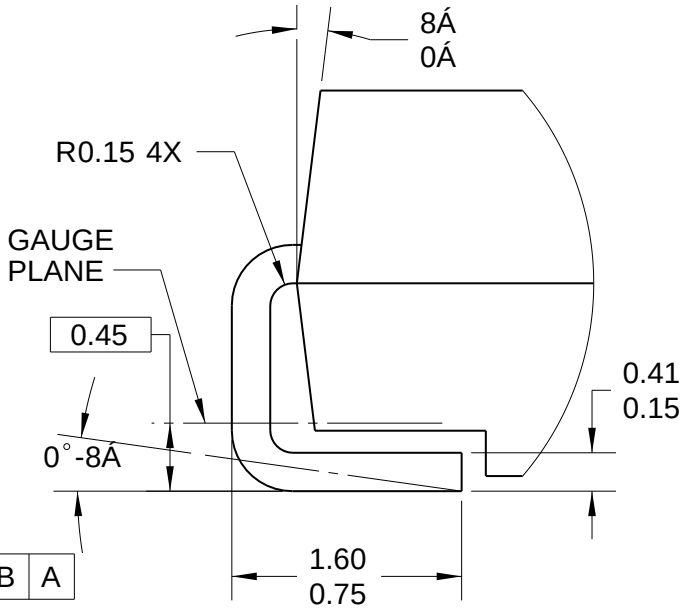

DETAIL A
SCALE 20 : 1

NOTES:

A. EXCEPT WHERE NOTED CONFORMS TO JEDEC DO214 VARIATION AA.
B. DOES NOT COMPLY JEDEC STD. VALUE.
C. ALL DIMENSIONS ARE IN MILLIMETERS.
D. DIMENSIONS ARE EXCLUSIVE OF BURRS, MOLD FLASH AND TIE BAR PROTRUSIONS.
E. DIMENSION AND TOLERANCE AS PER ASME Y14.5-1994.
F. LAND PATTERN STD. DIOM5336X240M.
G. DRAWING FILE NAME: DO214AAREV1

APPROVALS	DATE
DRAWN: BOBOY MALDO	19MAY2008
CHECKED: SD LEE	
APPROVED: FRED REN	
APPROVED: HOWARD ALLEN	

PROJECTION [MM] INCH

FAIRCHILD SEMICONDUCTOR™

2LD, SMB, JEDEC
DO214 VARIATION AA

SCALE	SIZE	DRAWING NUMBER	REV
1:1	N/A	MKT-DO214AA	1

FORMERLY: N/A

SHEET : 1 OF 1

TRADEMARKS

The following includes registered and unregistered trademarks and service marks, owned by Fairchild Semiconductor and/or its global subsidiaries, and is not intended to be an exhaustive list of all such trademarks.

AccuPower™
Awinda®
AX-CAP®*
BitSiC™
Build it Now™
CorePLUS™
CorePOWER™
CROSSVOLT™
CTL™
Current Transfer Logic™
DEUXPEED®
Dual Cool™
EcoSPARK®
EfficientMax™
ESBC™
®
Fairchild®
Fairchild Semiconductor®
FACT Quiet Series™
FACT®
FAST®
FastvCore™
FETBench™
FPS™
F-PFS™
FRFET®
Global Power Resource℠
GreenBridge™
Green FPS™
Green FPS™ e-Series™
G*max*™
GTO™
IntelliMAX™
ISOPLANAR™
Making Small Speakers Sound Louder and Better™
MegaBuck™
MICROCOUPLER™
MicroFET™
MicroPak™
MicroPak2™
MillerDrive™
MotionMax™
MotionGrid®
MTi®
MTx®
MVN®
mWSaver®
OptoHiT™
OPTOLOGIC®
OPTOPLANAR®
®
PowerTrench®
PowerXS™
Programmable Active Droop™
QFET®
QS™
Quiet Series™
RapidConfigure™
™
Saving our world, 1mW/W/kW at a time™
SignalWise™
SmartMax™
SMART START™
Solutions for Your Success™
SPM®
STEALTH™
SuperFET®
SuperSOT™-3
SuperSOT™-6
SuperSOT™-8
SupreMOS®
SyncFET™
Sync-Lock™
SYSTEM GENERAL®*
TinyBoost®
TinyBuck®
TinyCalc™
TinyLogic®
TINYOPTO™
TinyPower™
TinyPWM™
TinyWire™
TranSiC™
TriFault Detect™
TRUECURRENT®*
µSerDes™
µSerDes™
UHC®
Ultra FRFET™
UniFET™
VCX™
VisualMax™
VoltagePlus™
XS™
Xsens™
仙童™

* Trademarks of System General Corporation, used under license by Fairchild Semiconductor.

DISCLAIMER

FAIRCHILD SEMICONDUCTOR RESERVES THE RIGHT TO MAKE CHANGES WITHOUT FURTHER NOTICE TO ANY PRODUCTS HEREIN TO IMPROVE RELIABILITY, FUNCTION, OR DESIGN. TO OBTAIN THE LATEST, MOST UP-TO-DATE DATASHEET AND PRODUCT INFORMATION, VISIT OUR WEBSITE AT HTTP://WWW.FAIRCHILDSEMI.COM. FAIRCHILD DOES NOT ASSUME ANY LIABILITY ARISING OUT OF THE APPLICATION OR USE OF ANY PRODUCT OR CIRCUIT DESCRIBED HEREIN; NEITHER DOES IT CONVEY ANY LICENSE UNDER ITS PATENT RIGHTS, NOR THE RIGHTS OF OTHERS. THESE SPECIFICATIONS DO NOT EXPAND THE TERMS OF FAIRCHILD'S WORLDWIDE TERMS AND CONDITIONS, SPECIFICALLY THE WARRANTY THEREIN, WHICH COVERS THESE PRODUCTS.

LIFE SUPPORT POLICY

FAIRCHILD'S PRODUCTS ARE NOT AUTHORIZED FOR USE AS CRITICAL COMPONENTS IN LIFE SUPPORT DEVICES OR SYSTEMS WITHOUT THE EXPRESS WRITTEN APPROVAL OF FAIRCHILD SEMICONDUCTOR CORPORATION.

As used herein:

1. Life support devices or systems are devices or systems which, (a) are intended for surgical implant into the body or (b) support or sustain life, and (c) whose failure to perform when properly used in accordance with instructions for use provided in the labeling, can be reasonably expected to result in a significant injury of the user.
2. A critical component in any component of a life support, device, or system whose failure to perform can be reasonably expected to cause the failure of the life support device or system, or to affect its safety or effectiveness.

ANTI-COUNTERFEITING POLICY

Fairchild Semiconductor Corporation's Anti-Counterfeiting Policy. Fairchild's Anti-Counterfeiting Policy is also stated on our external website, www.fairchildsemi.com, under Sales Support.

Counterfeiting of semiconductor parts is a growing problem in the industry. All manufacturers of semiconductor products are experiencing counterfeiting of their parts. Customers who inadvertently purchase counterfeit parts experience many problems such as loss of brand reputation, substandard performance, failed applications, and increased cost of production and manufacturing delays. Fairchild is taking strong measures to protect ourselves and our customers from the proliferation of counterfeit parts. Fairchild strongly encourages customers to purchase Fairchild parts either directly from Fairchild or from Authorized Fairchild Distributors who are listed by country on our web page cited above. Products customers buy either from Fairchild directly or from Authorized Fairchild Distributors are genuine parts, have full traceability, meet Fairchild's quality standards for handling and storage and provide access to Fairchild's full range of up-to-date technical and product information. Fairchild and our Authorized Distributors will stand behind all warranties and will appropriately address any warranty issues that may arise. Fairchild will not provide any warranty coverage or other assistance for parts bought from Unauthorized Sources. Fairchild is committed to combat this global problem and encourage our customers to do their part in stopping this practice by buying direct or from authorized distributors.

PRODUCT STATUS DEFINITIONS

Definition of Terms

Datasheet Identification	Product Status	Definition
Advance Information	Formative / In Design	Datasheet contains the design specifications for product development. Specifications may change in any manner without notice.
Preliminary	First Production	Datasheet contains preliminary data; supplementary data will be published at a later date. Fairchild Semiconductor reserves the right to make changes at any time without notice to improve design.
No Identification Needed	Full Production	Datasheet contains final specifications. Fairchild Semiconductor reserves the right to make changes at any time without notice to improve the design.
Obsolete	Not In Production	Datasheet contains specifications on a product that is discontinued by Fairchild Semiconductor. The datasheet is for reference information only.

Rev. I72

Mouser Electronics

Authorized Distributor

Click to View Pricing, Inventory, Delivery & Lifecycle Information:

Fairchild Semiconductor:

SMBJ36A